ASSEMBLY INSTRUCTIONS

150CM BED

Approximate Assembly Time	People Required to Assemble	Tools Required
1hr		

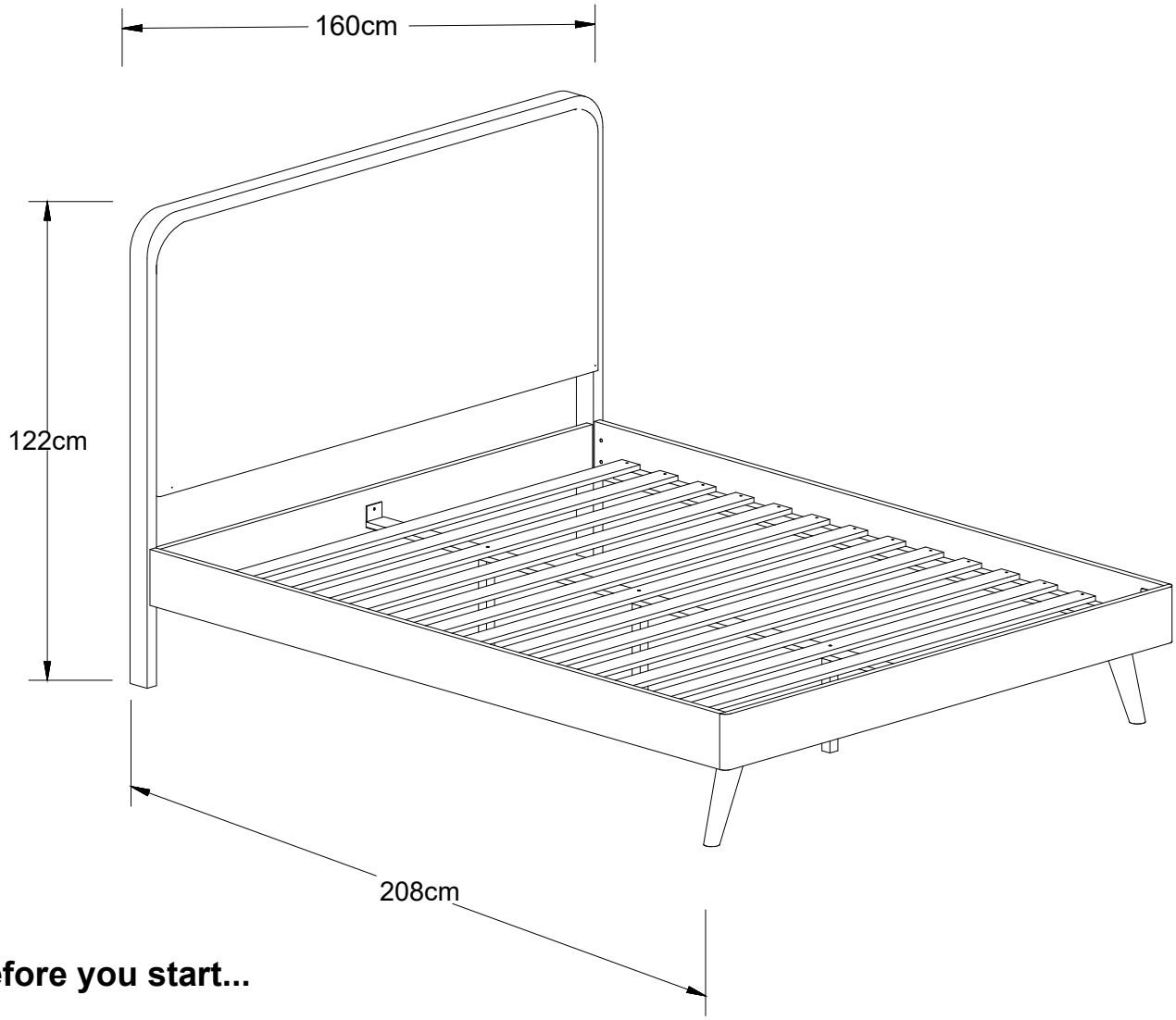

Before you start...

Please carefully unpack and lay out all of the component parts to ensure nothing is missing and to check each component for any obvious damage.

Should you identify any concerns at this stage please contact the retailer from whom this product was purchased. Please quote your order number, details of your issue, the product code, and the batch number from the cartons which will help to resolve your issue as quickly as possible.

Version Number - V1.1 **Product Code - WAL001**

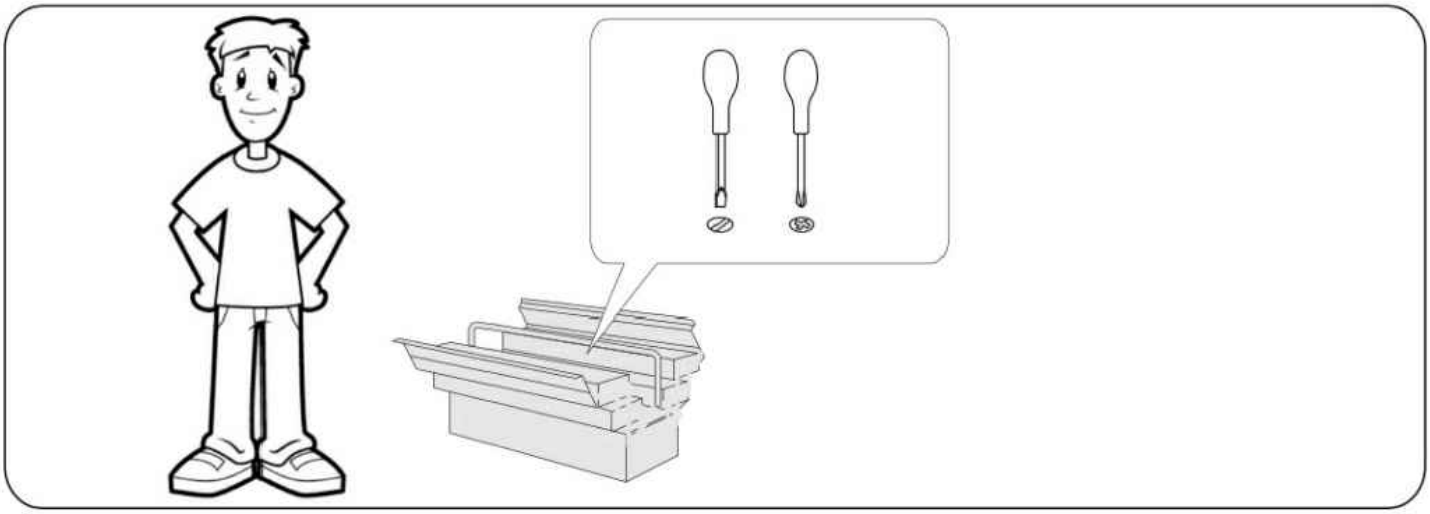

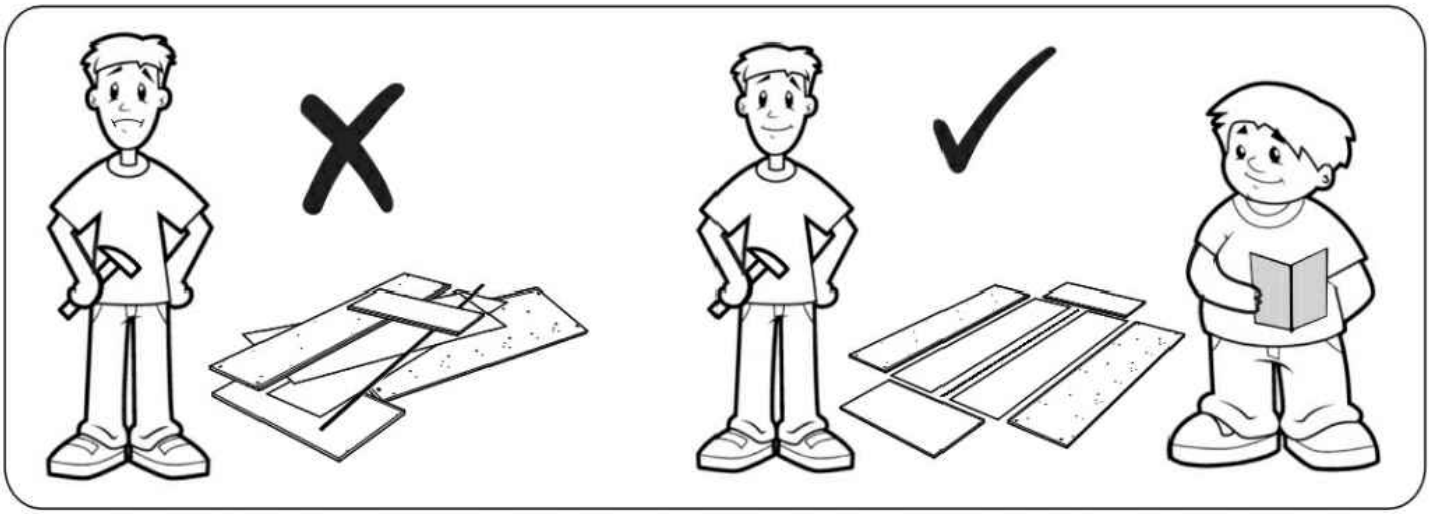

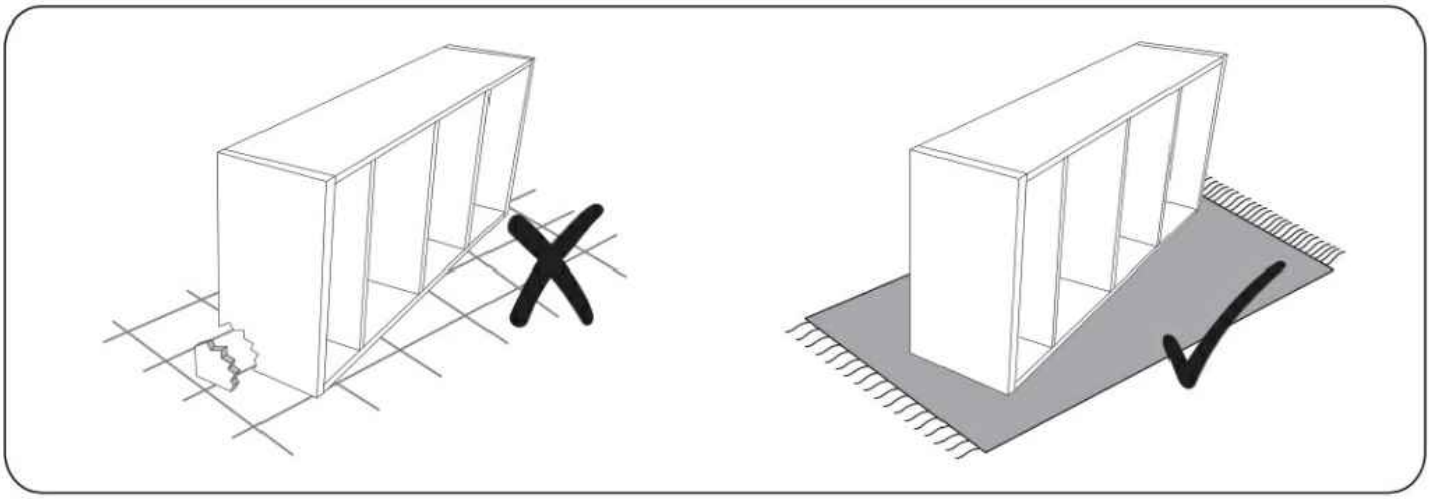

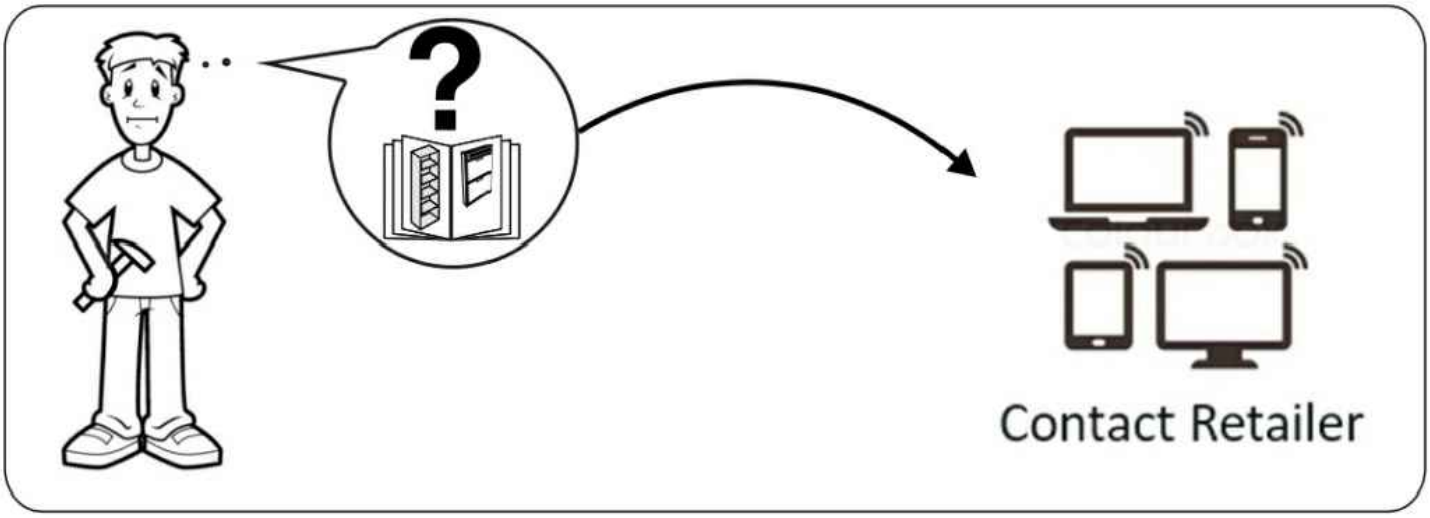
Contact Retailer

Please check all hardware matches the list below. Should you notice any are missing please contact your retailer.

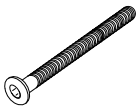

A

JCBC M6 x 90mm

4x

B

JCBC M6 x 65mm

2x

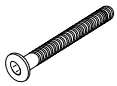

C

JCBC M6 x 50mm

9x

D

JCBC M6 x 30mm

2x

E

JCBC M6 x 15mm

2x

F

JCBB M8 x 40mm

4x

G

JCBB M8 x 20mm

4x

H

CSK Screw M4 x 32mm

26x

I

CSK Screw M4 x 12mm

4x

J

L/Bracket

2x

K

Flat Washer M6

8x

L

Spring Washer M6

12x

M

Flat Washer M8 x 22mm

4x

N

Flat Washer M8 x 16mm

4x

O

Spring Washer M8

8x

P

Barrel Nut

4x

Q

Hex Nut M6

2x

R

Wood Dowel M10 x 40mm

2x

S

Allen Key M4

1x

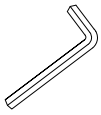

T

Allen Key M5

1x

We strongly advise that you do not use Power Tools, such as drills or electric screwdrivers during the assembly as this may cause irreparable damage and will invalidate your warranty.

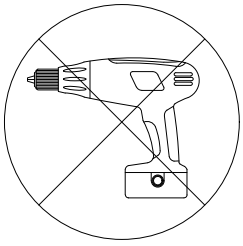

PARTS

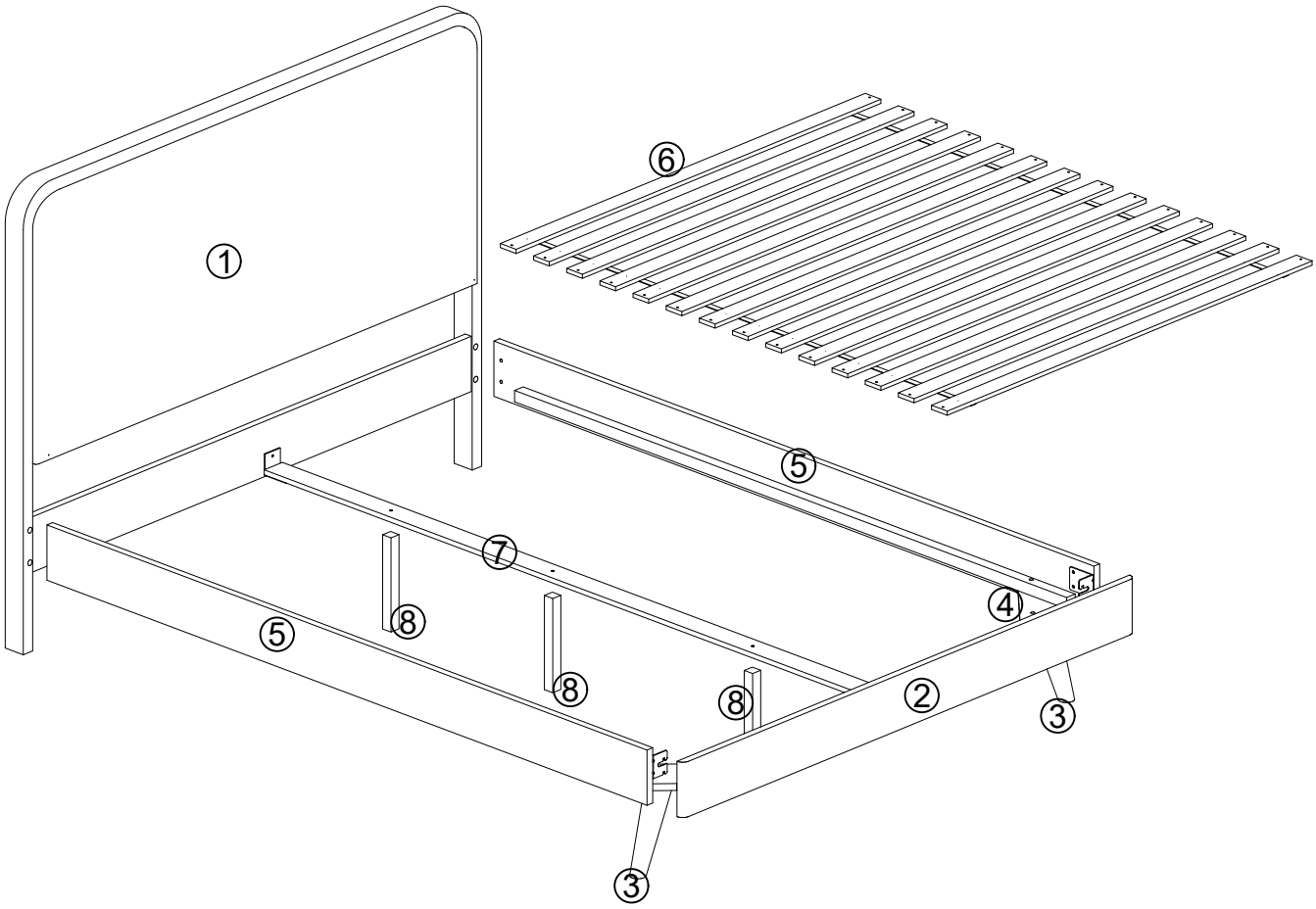

Please ensure you carefully check all the pieces, should you have any concerns please contact the retailer before assembly commences. Please have your order number, details of the issue, the product code, and the batch number from the cartons as this will help us to resolve your issue much faster.

ASSEMBLY ADVICE

Please take the time to carefully read through these instructions before you commence.

Keep these instructions for future reference.

We advise that the product is assembled in the room it is intended for.

We advise that you keep the hardware in a bowl during assembly to avoid losing anything.

We strongly recommend that you keep children away from the work area.

Small component parts could choke a child if swallowed.

We recommend you use a sheet or blanket to protect both floor and product through the assembly stages.

This product is heavy, and we recommend a 2 person lift to avoid personal injury or damage to the product.

Never push or pull the product as this could cause both personal injury or irreparable damage to product or floor.

We have tried to make this piece of furniture easy to assemble if the instructions are followed carefully.

In the unlikely event that you have problems with assembling the product or have missing or damaged parts, please contact your retailer and we will assist them in rectifying the problem as quickly as possible.

Please remember we strongly urge you DO NOT use power tools such as drill or electric screwdrivers as this could cause irreparable damage to your product and will invalidate your warranty.

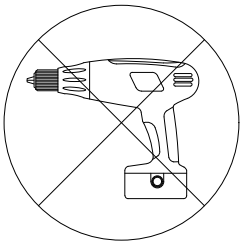

1

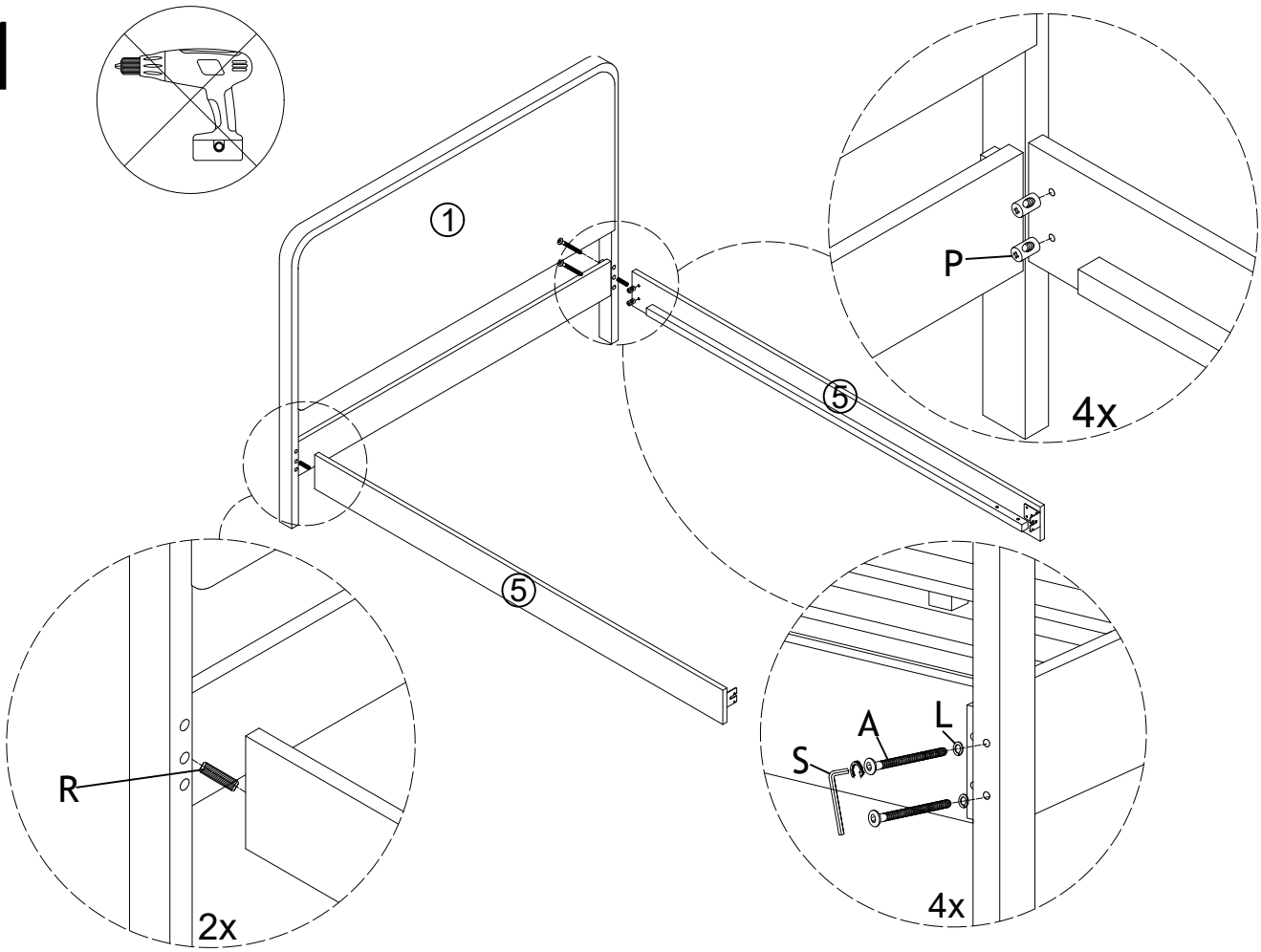

2

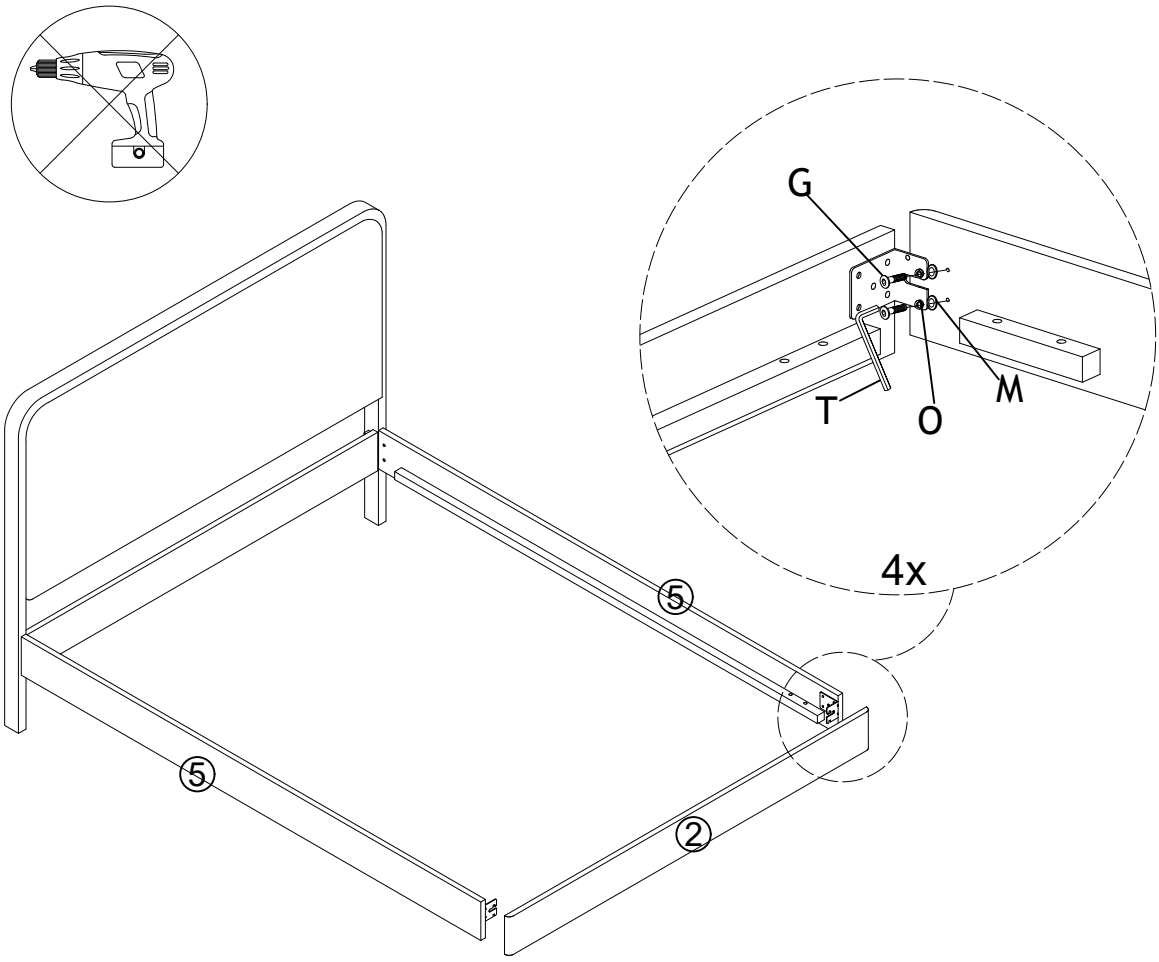

3

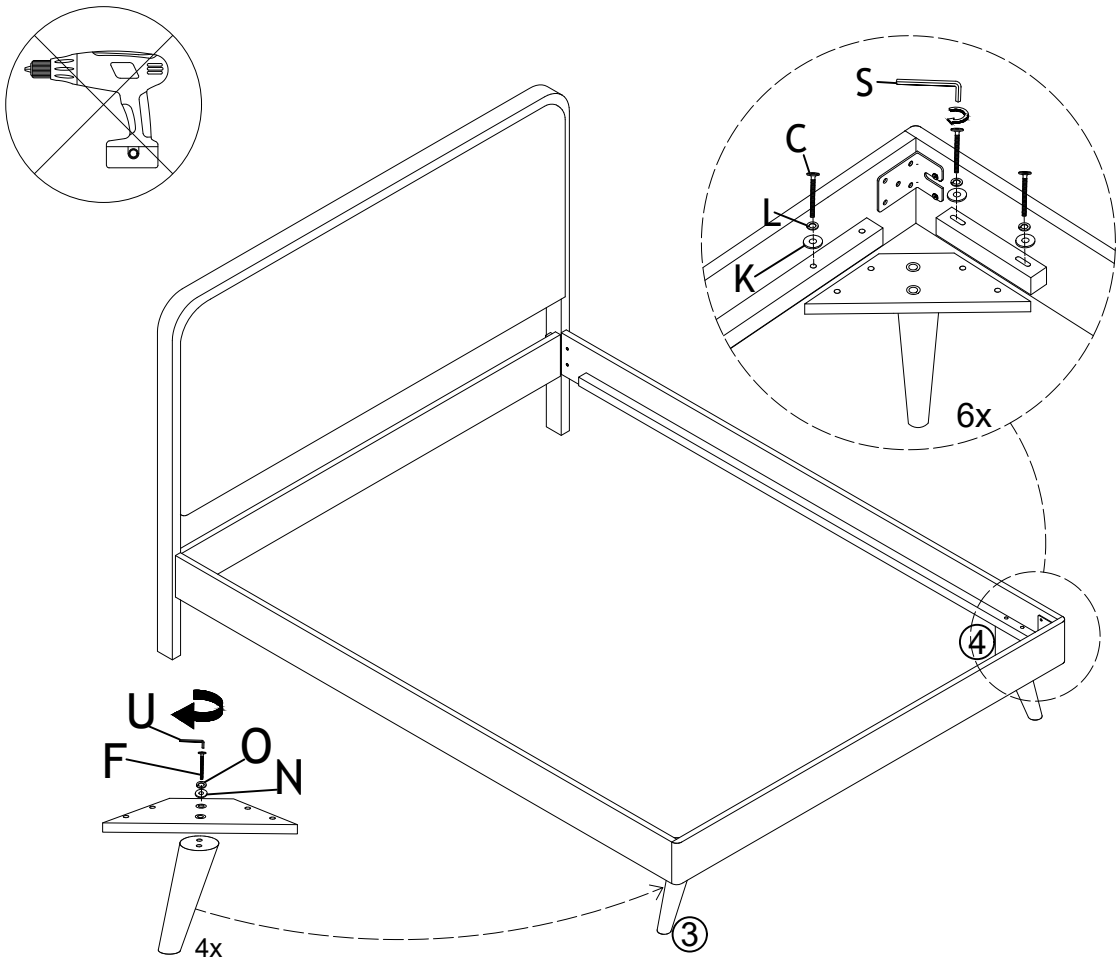

4

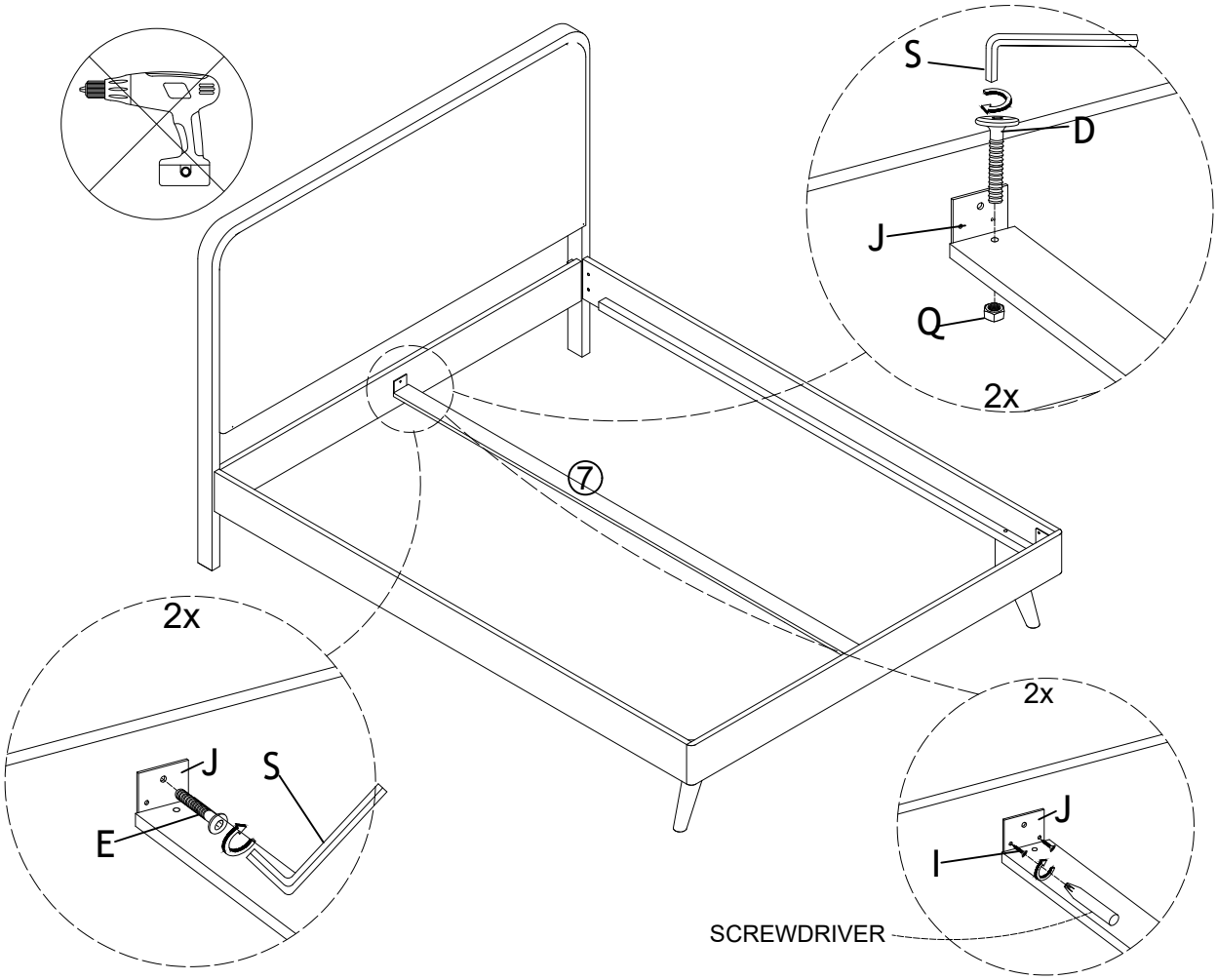

5

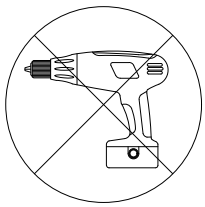

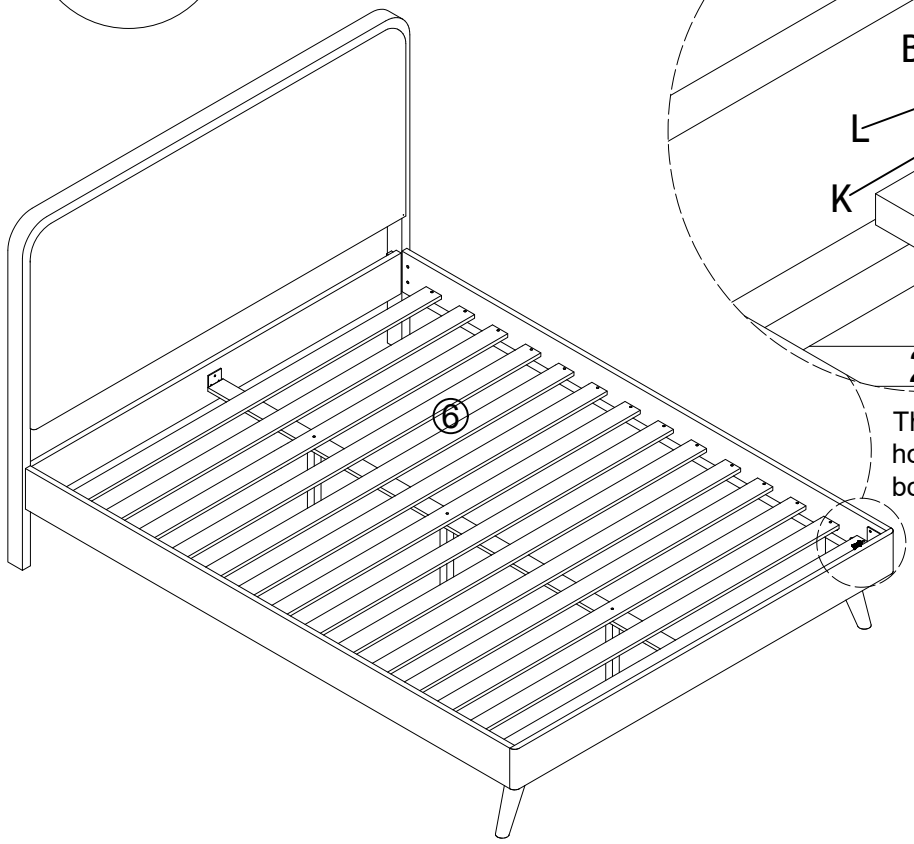

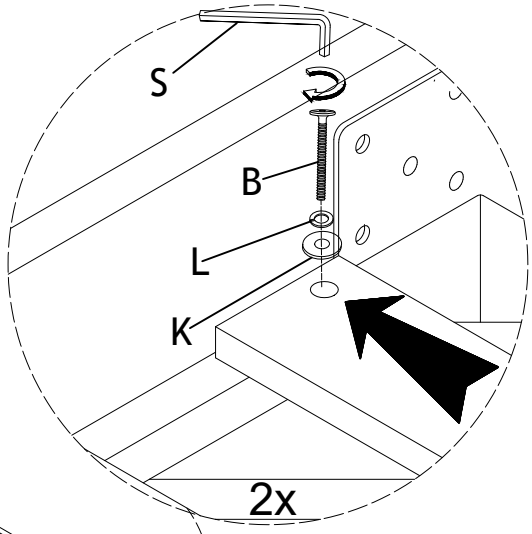

The LVL slat with larger-sized holes must be installed at the bottom of the bed (footboard).

6

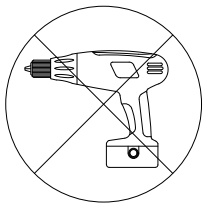

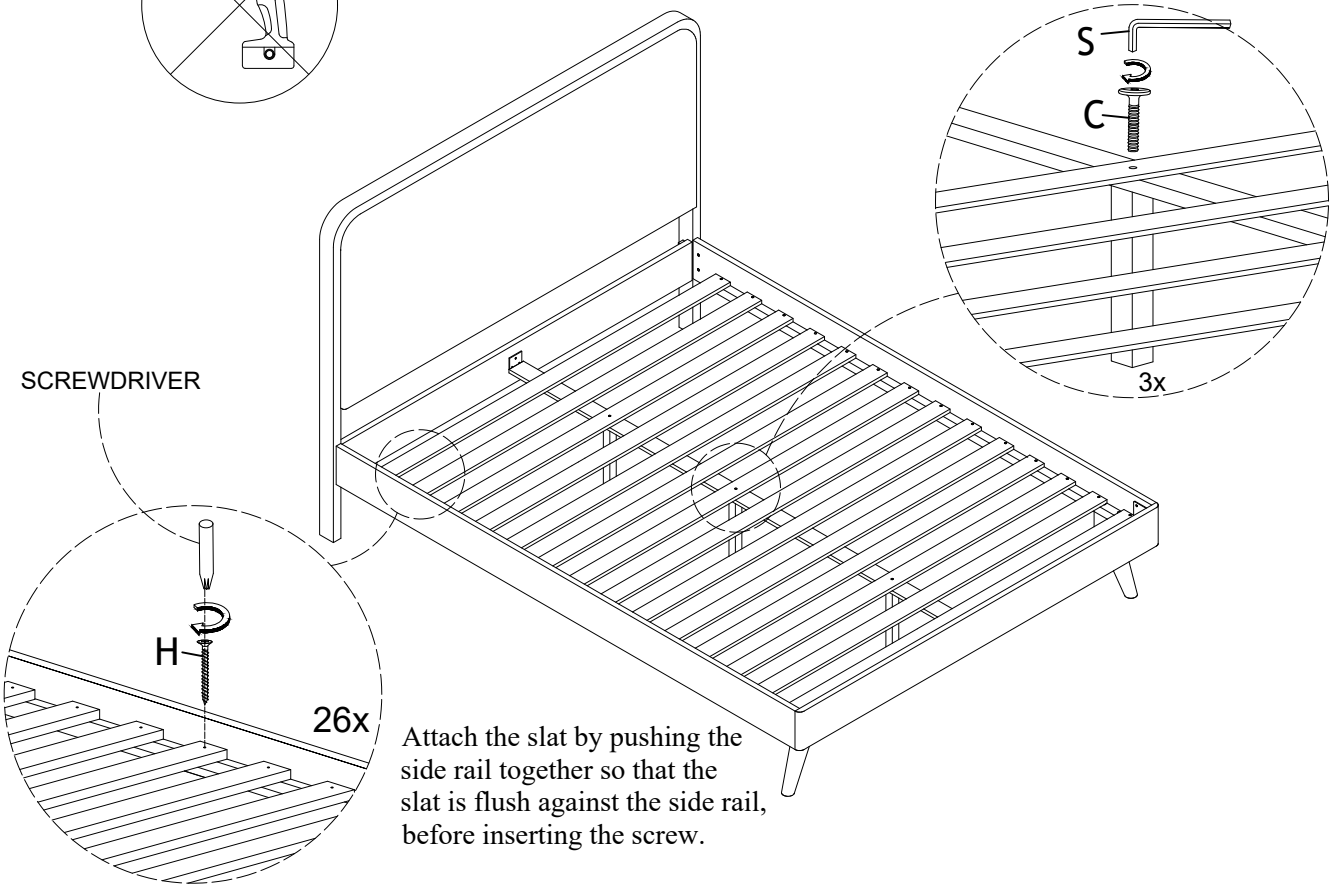

Attach the slat by pushing the side rail together so that the slat is flush against the side rail, before inserting the screw.

Complete

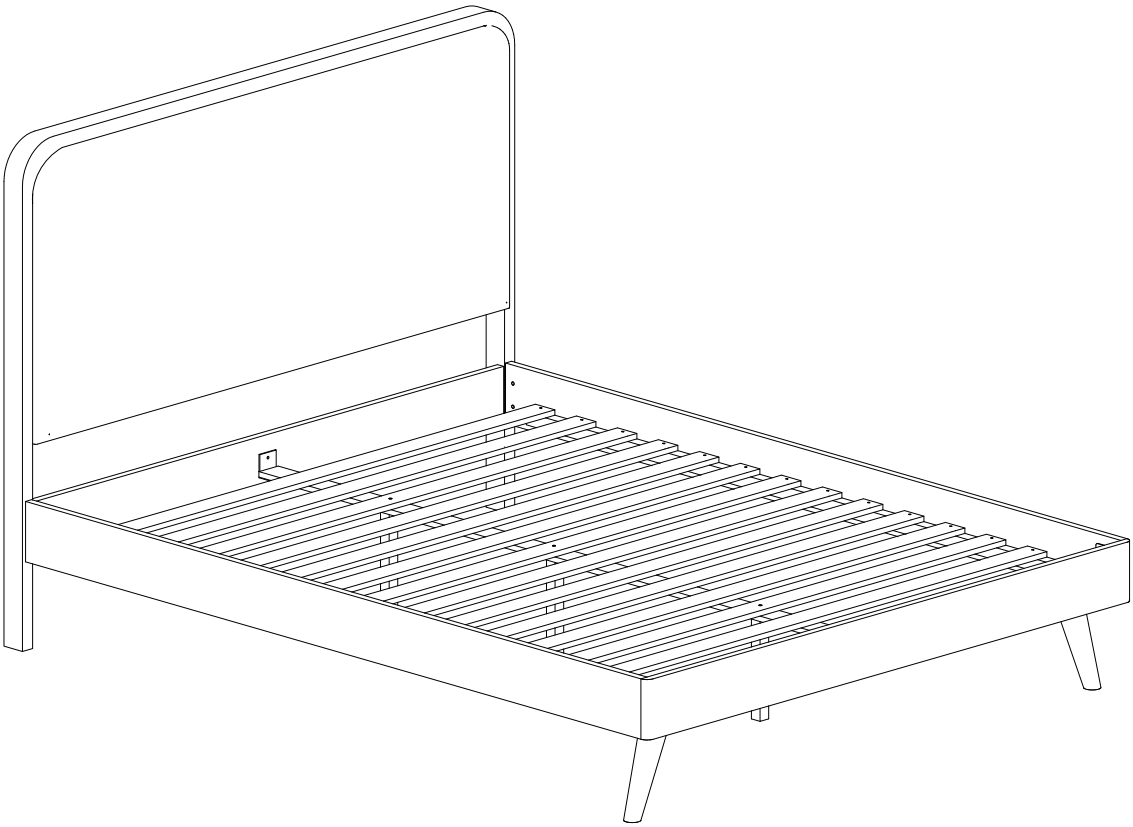

GENERAL CARE & MAINTENANCE

We advise that when cleaning the product that a damp cloth is used.

Avoid the use of all household cleaners and abrasive.

Never push or drag the furniture.

Never attempt to move the furniture when fully loaded.

We advise that periodically all fixing are re-tightened.

JULIAN BOWEN

Bentinck House, Park Lane Business Park, Kirkby-in-Ashfield, Notts NG17 9LE
Tel: (01623) 727374 Fax: (01623) 754555 Email: sales@julian-bowen.co.uk Web:julian-bowen.co.uk

EN:
In compliance with the EU General Product Safety Regulation (2023), Julian Bowen Limited has authorised the person named below to perform the tasks specified in the Regulation.

Name: Aris Christos Botsios Engineering Office
Adress: V. Botsiou 3 Street, Eleousa, Ioannina, 45500, Greece
Email: acsbotsios82@gmail.com
Telephone: 00302651063075 (landline)

DE:
In Übereinstimmung mit der EU-Verordnung über die allgemeine Produktsicherheit (2023) hat Julian Bowen Limited die unten genannte person ermächtigt, die in der Verordnung genannten Aufgaben wahrzunehmen.

Name: Aris Christos Botsios Ingenieurbüro
Adresse: V. Botsiou 3, Eleousa, Ioannina, 45500, Griechenland
E-Mail: acsbotsios82@gmail.com
Telefon: 00302651063075 (festnetz)

IT:
In conformità con il Regolamento Generale Sulla Sicurezza dei Prodotti dell'UE (2023), Julian Bowen Limited ha autorizzato la persona indicata di seguito a svolgere i compiti specificati nel Regolamento.

Nome: Aris Christos Botsios Ufficio tecnico
Indirizzo: V. Botsiou 3, Eleousa, Ioannina, 45500, Grecia
Email: acsbotsios82@gmail.com
Telefono: 00302651063075 (linea fissa)

FR:
Conformément au règlement de l'UE sur la Sécurité Générale des Produits (2023), Julian Bowen Limited a autorisé la personne nommée ci-dessous à effectuer les tâches spécifiées dans le règlement.

Nom: Aris Christos Botsios Bureau d'études
Adresse: V. Botsiou, Eleousa, Ioannina, 45500, Grèce
Courriel: acsbotsios82@gmail.com
Téléphone: 00302651063075 (ligne fixe)

ES:
En cumplimiento del Reglamento de la UE relativo a La Seguridad General de Los Productos (2023), Julian Bowen Limited ha autorizado a la persona nombrada a continuación a realizar las tareas especificadas en el Reglamento.

Nombre: Aris Christos Botsios Oficina de Ingeniería
Dirección: V. Botsiou 3, Eleousa, Ioannina, 45500, Grecia
Correo electrónico: acsbotsios82@gmail.com
Teléfono: 00302651063075 (teléfono fijo)

SE:
I enlighet med EU förordning om allmän produktsäkerhet (2023) har Julian Bowen Limited bemyndigat den person som anges nedan att utföra de uppgifter som anges i förordningen.

Namn: Aris Christos Botsios Ingenjörsbyrå
Adress: V. Botsiou 3 Street, Eleousa, Ioannina, 45500, Grekland
E-post: acsbotsios82@gmail.com
Telefon: 00302651063075 (fast telefon)

NL:
In overeenstemming met de EU-verordening inzake algemene productveiligheid (2023) heeft Julian Bowen Limited de hieronder vermelde persoon gemachtigd om de in de verordening gespecificeerde taken uit te voeren.

Naam: Aris Christos Botsios Ingenieursbureau
Adres: V. Botsiou 3 Street, Eleousa, Ioannina, 45500, Griekenland
E-mail: acsbotsios82@gmail.com
Telefoon: 00302651063075 (vaste lijn)