ASSEMBLY INSTRUCTIONS

FABRIC BED OTTOMAN 150CM

Approximate Assembly Time	People Required to Assemble	Tools Required
1hr		

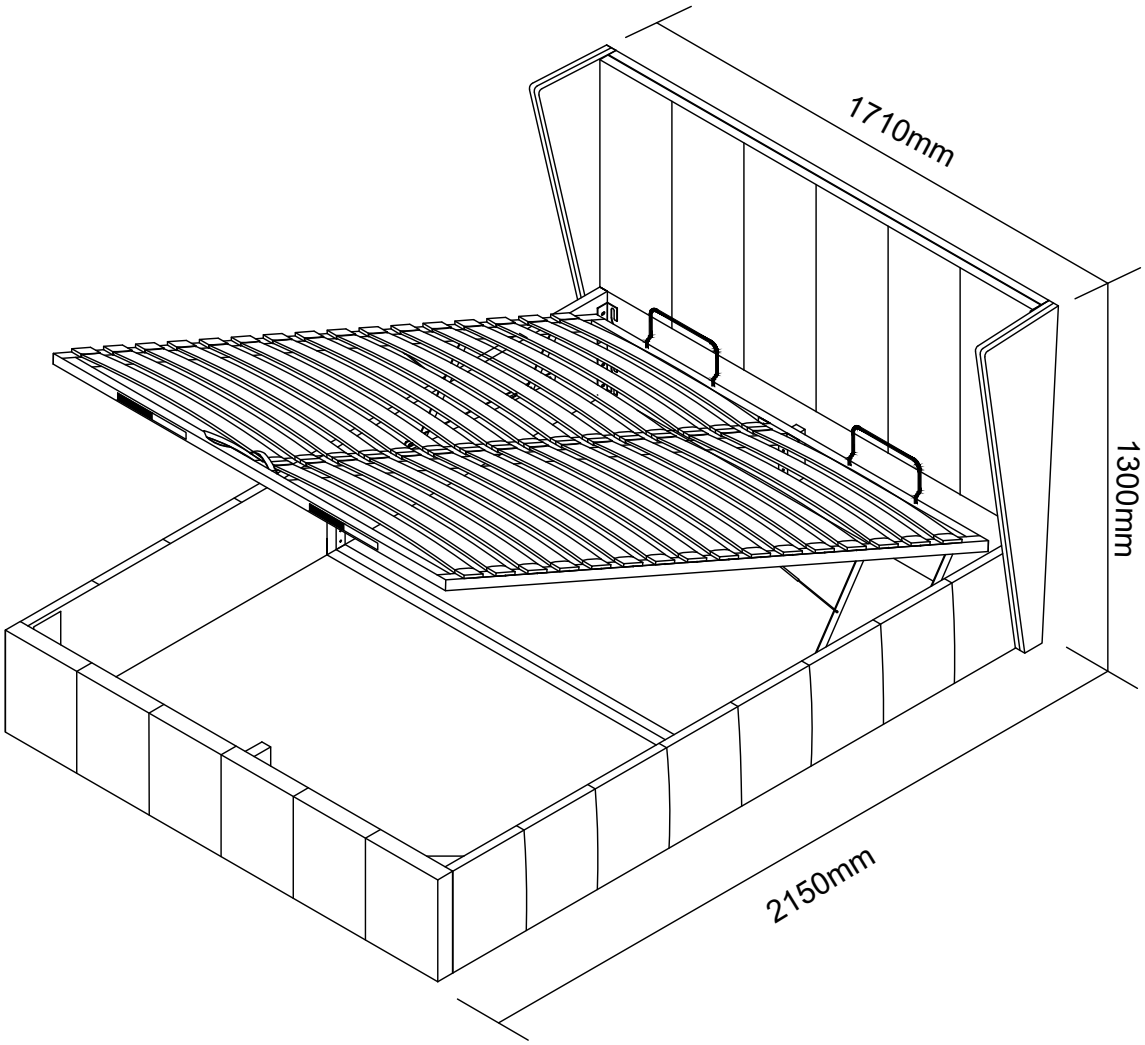

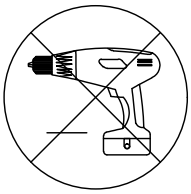

Before you start...

Please carefully unpack and lay out all of the component parts to ensure nothing is missing and to check each component for any obvious damage.

Should you identify any concerns at this stage please contact the retailer from whom this product was purchased. Please quote your order number, details of your issue, the product code, and the batch number from the cartons which will help to resolve your issue as quickly as possible.

Version Number - 1.0

Product Code - KAT302

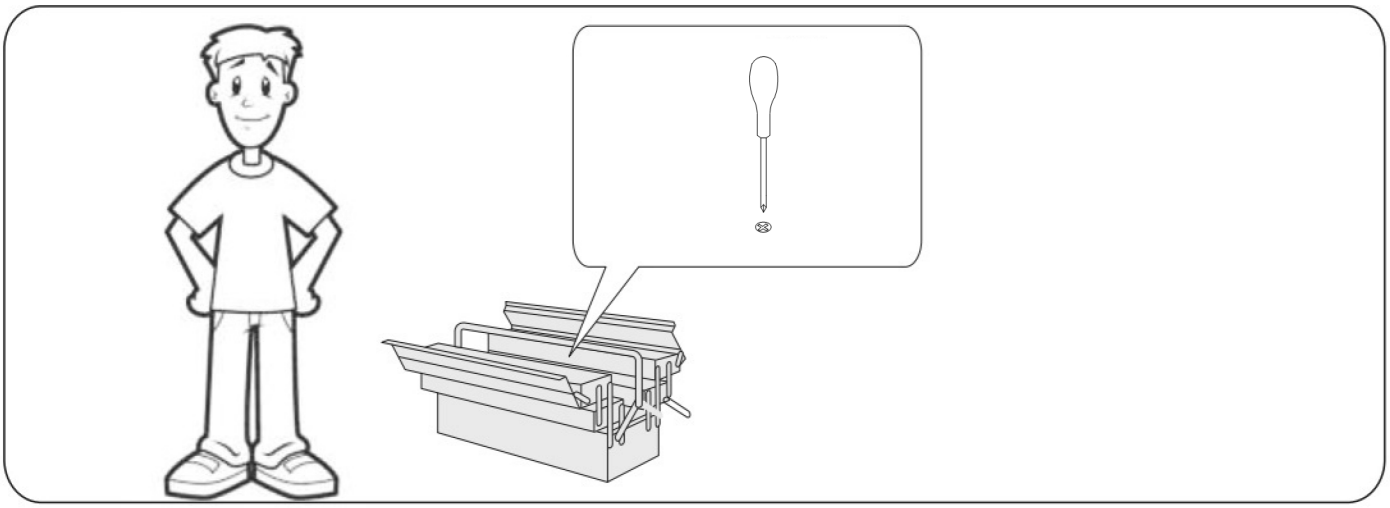

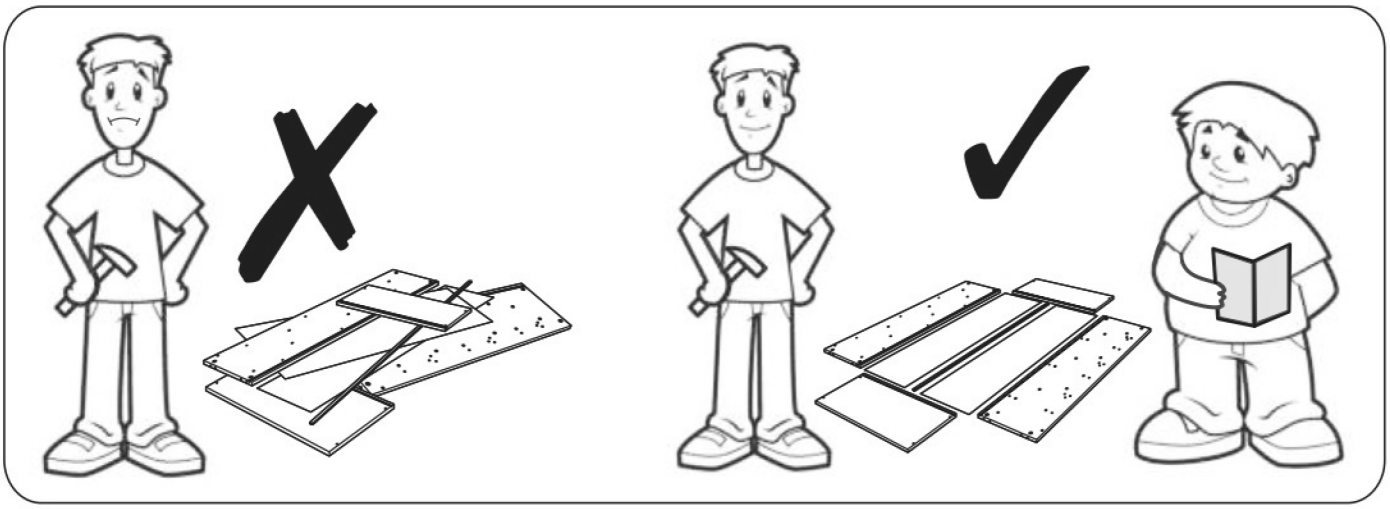

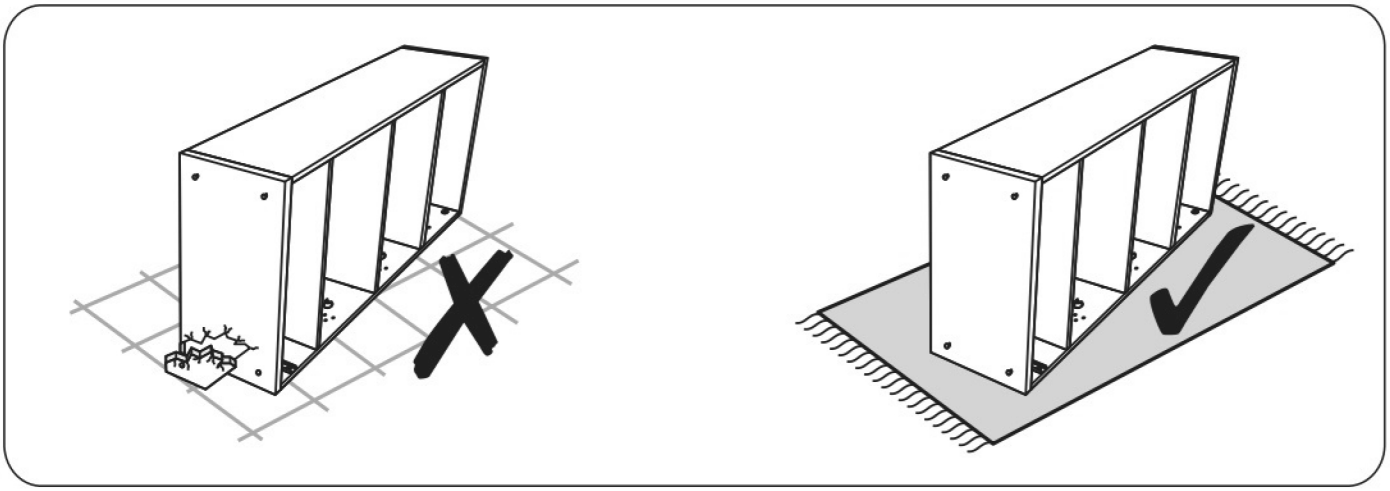

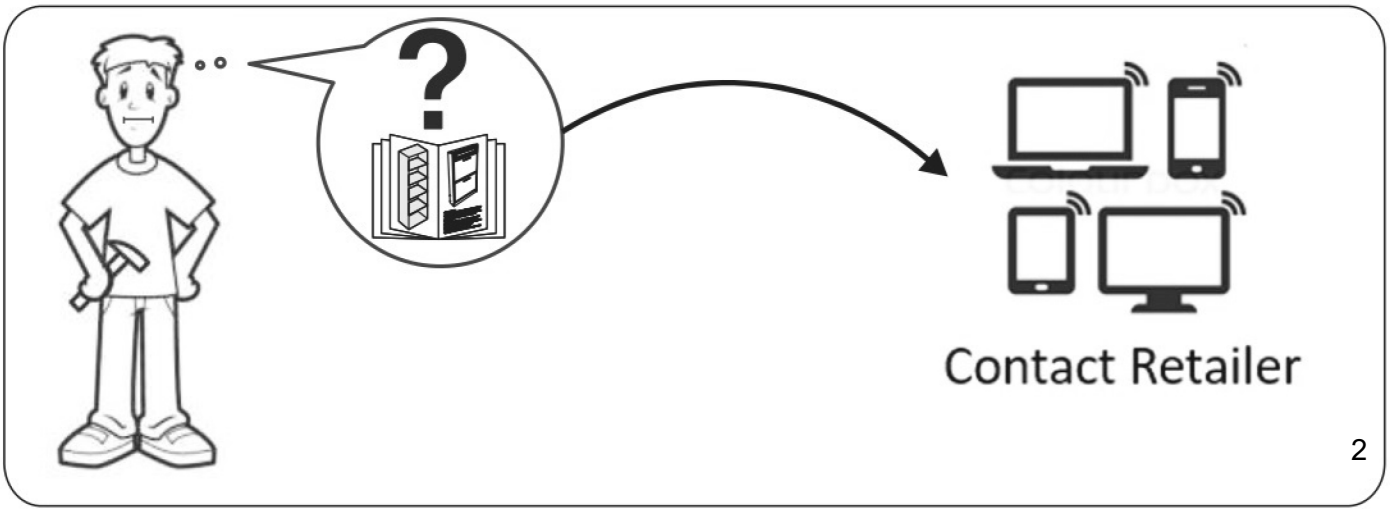
Contact Retailer

Please check all hardware matches the list below. Should you notice any are missing please contact your retailer.

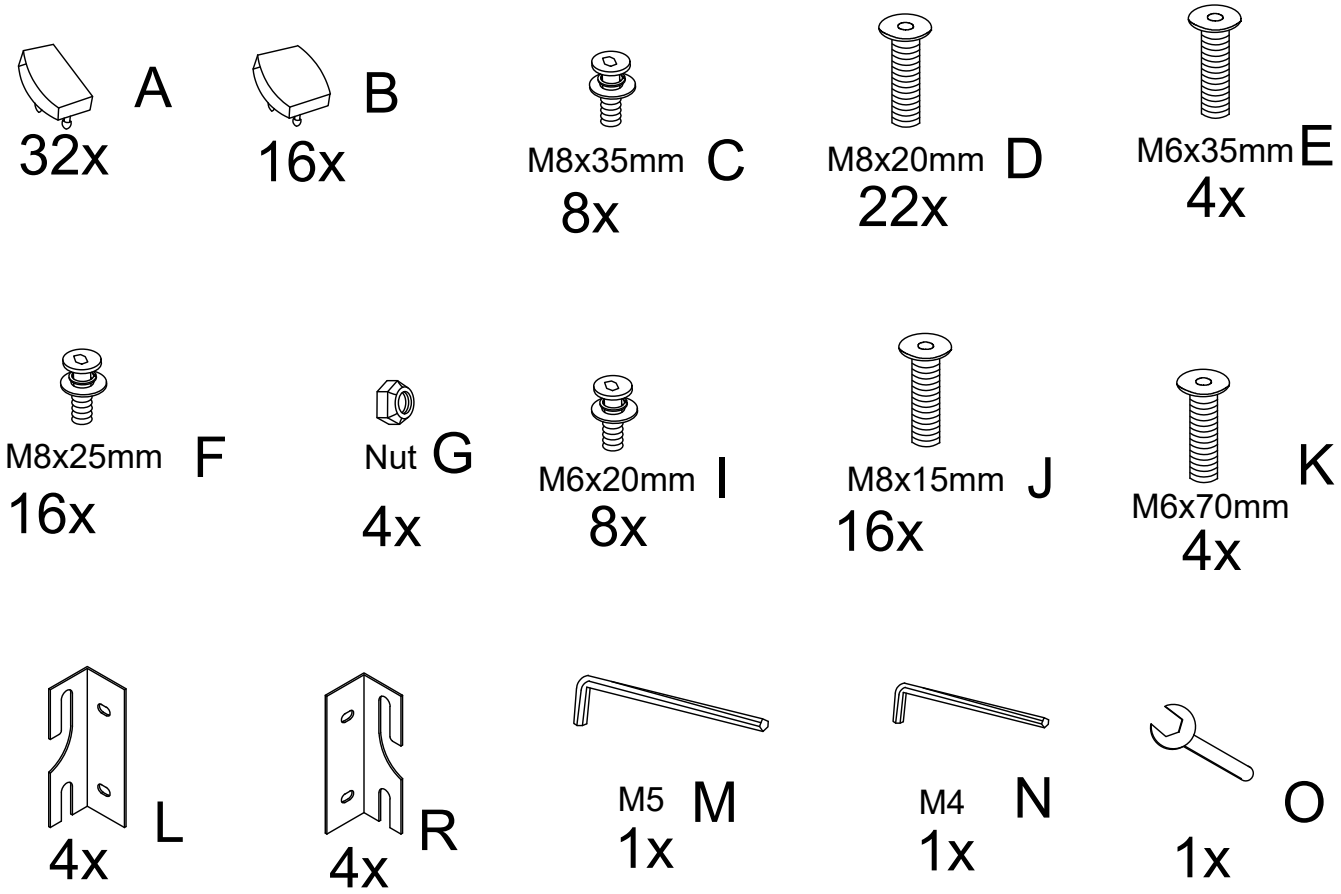

We strongly advise that you do not use Power Tools, such as drills or electric screwdrivers during the assembly as this may cause irreparable damage and will invalidate your warranty.

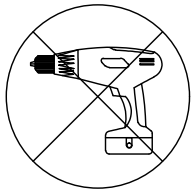

PARTS

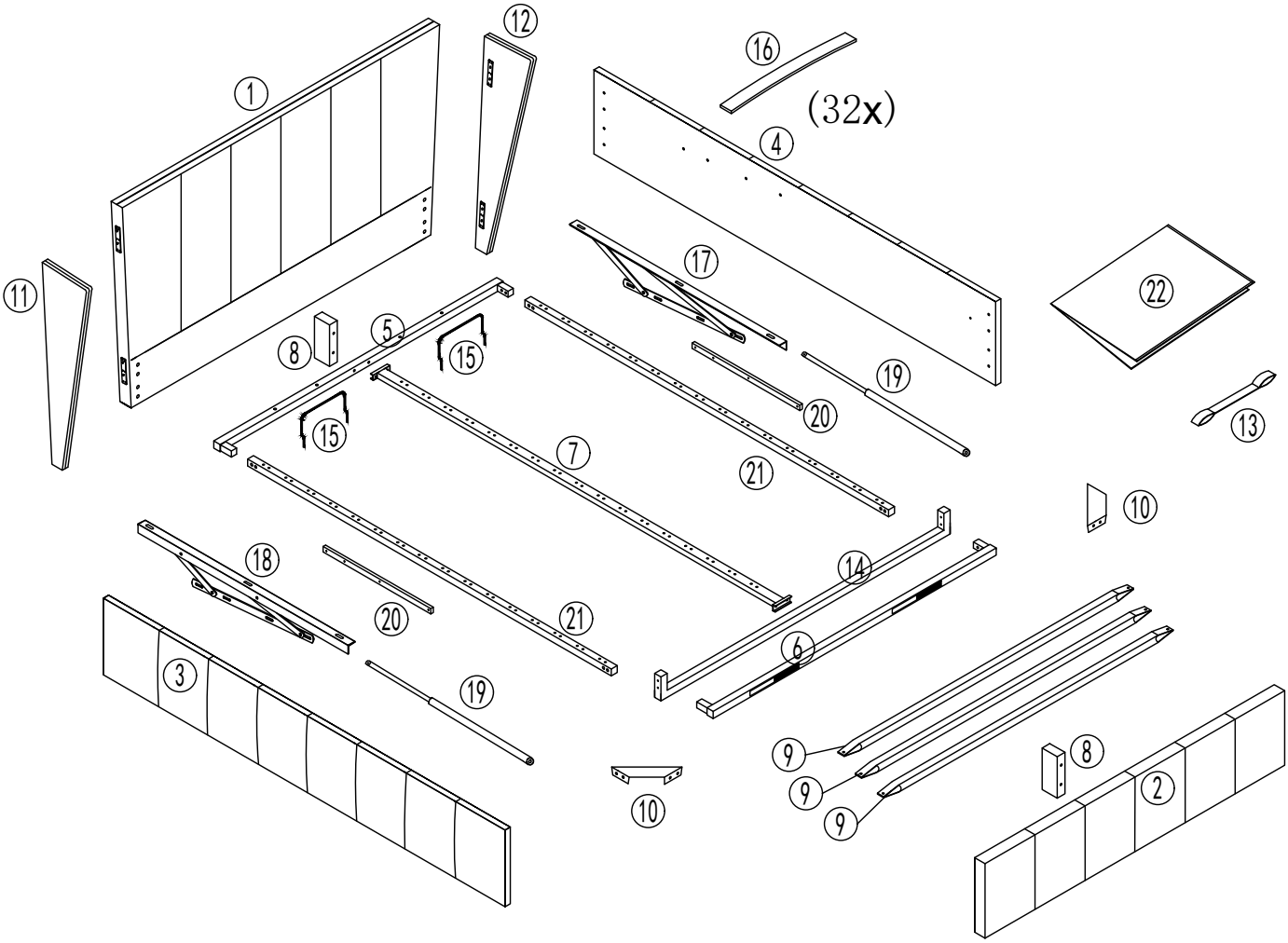

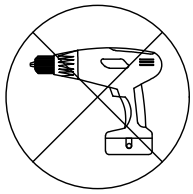

Please ensure you carefully check all the pieces, should you have any concerns please contact the retailer before assembly commences. Please have your order number, details of the issue, the product code, and the batch number from the cartons as this will help us to resolve your issue much faster.

ASSEMBLY ADVICE

Please take the time to carefully read through these instructions before you commence.

Keep these instructions for future reference.

We advise that the product is assembled in the room it is intended for.

We advise that you keep the hardware in a bowl during assembly to avoid losing anything.

We strongly recommend that you keep children away from the work area.

Small component parts could choke a child if swallowed.

We recommend you use a sheet or blanket to protect both floor and product through the assembly stages.

This product is heavy, and we recommend a 2 person lift to avoid personal injury or damage to the product.

Never push or pull the product as this could cause both personal injury or irreparable damage to product or floor.

We have tried to make this piece of furniture easy to assemble if the instructions are followed carefully.

In the unlikely event that you have problems with assembling the product or have missing or damaged parts, please contact your retailer and we will assist them in rectifying the problem as quickly as possible.

Please remember we strongly urge you DO NOT use power tools such as drill or electric screwdrivers as this could cause irreparable damage to your product and will invalidate your warranty.

IMPORTANT SAFETY ADVICE

Always ensure the mattress used is within the specified weight and size limits for your ottoman bed frame. Exceeding these limits may compromise the safety and functionality of the lifting mechanism.

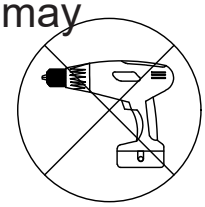

1

M8x20mm	M8x25mm		
D	F	L	R
16x	16x	4x	4x

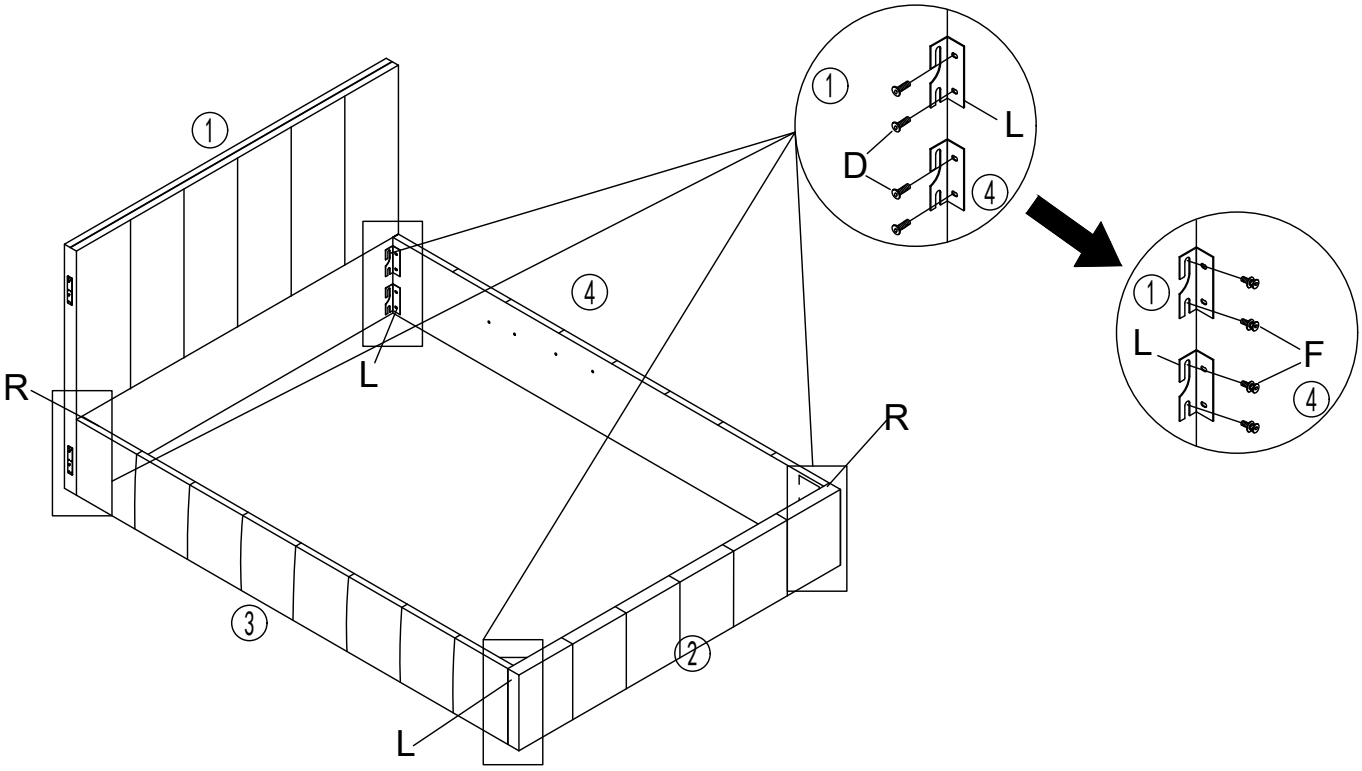

2

M6x70mm	M6x35mm	M6x20mm
K	E	I
4x	4x	8x

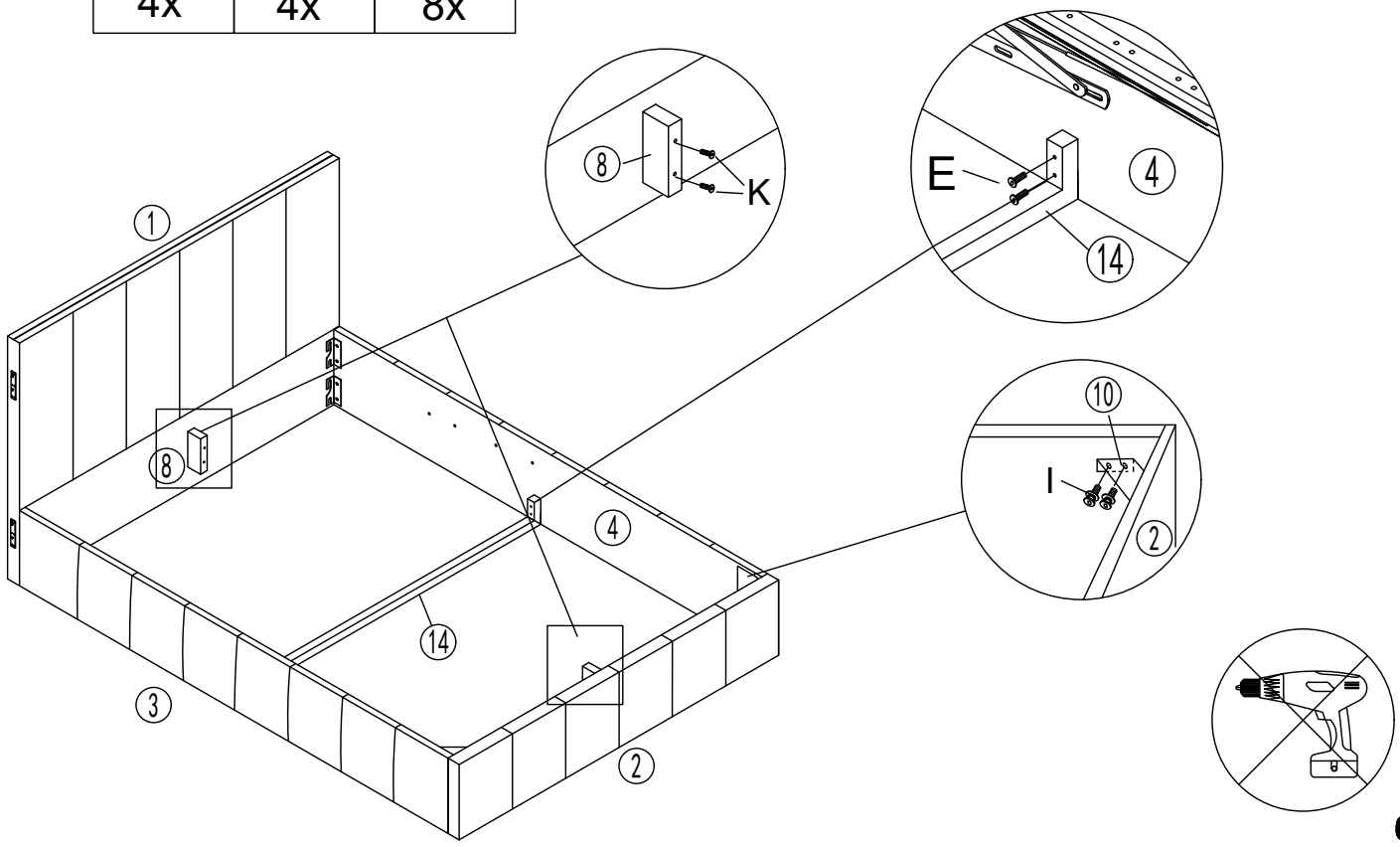

3

M8x35mm
C
8x

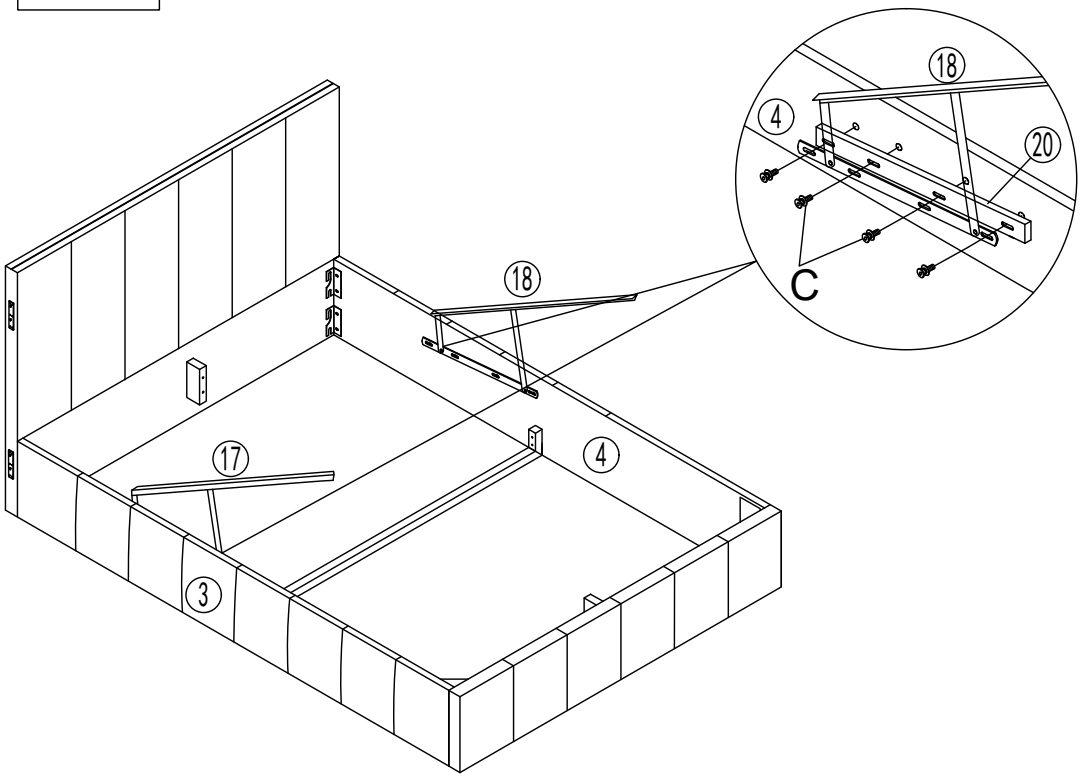

4

M8x15mm
J
4x

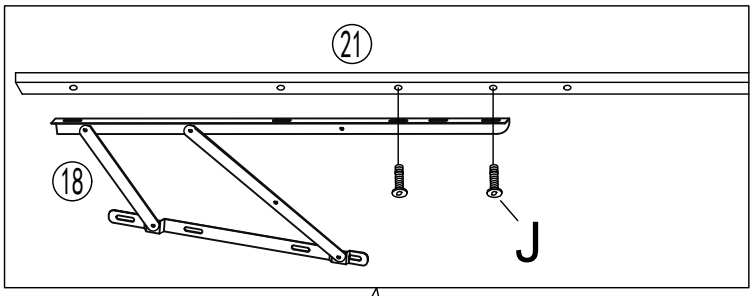

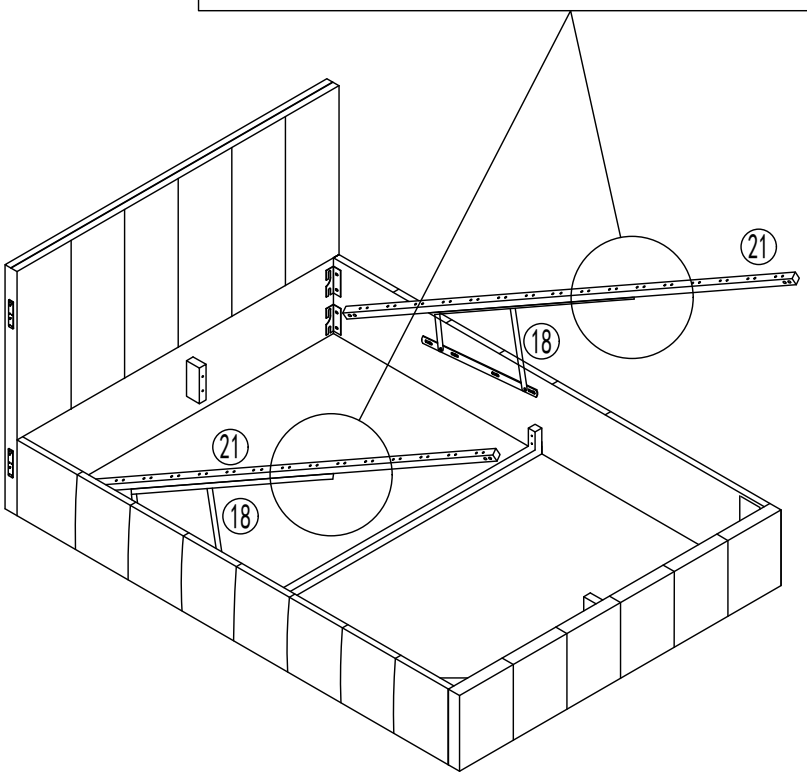

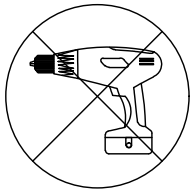

5

M8x20mm	M8x15mm
D	J
6x	12x

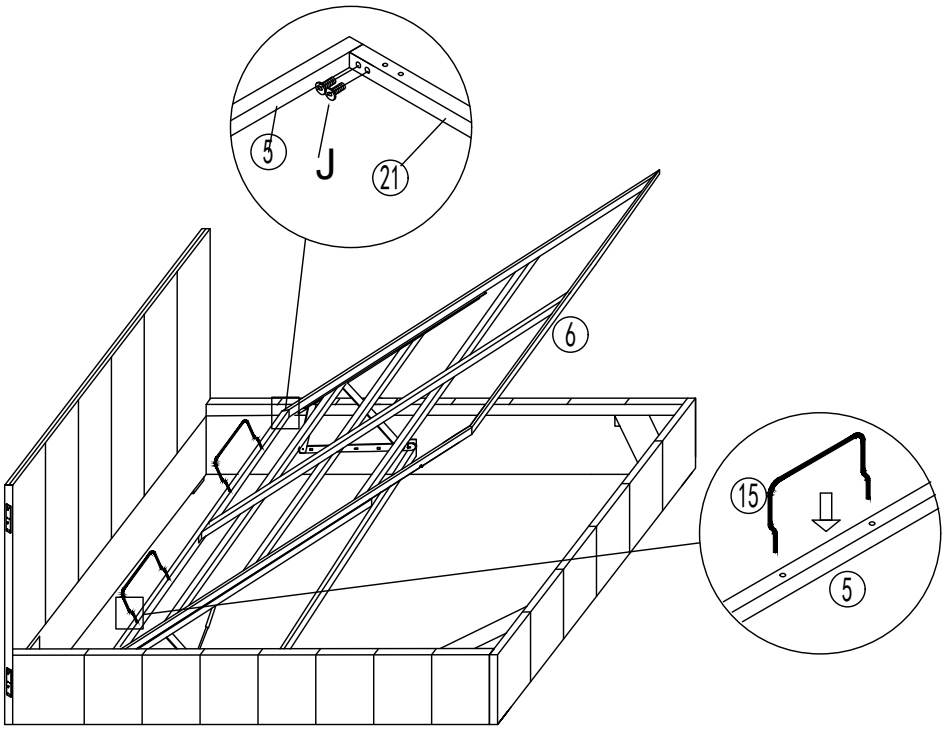

6

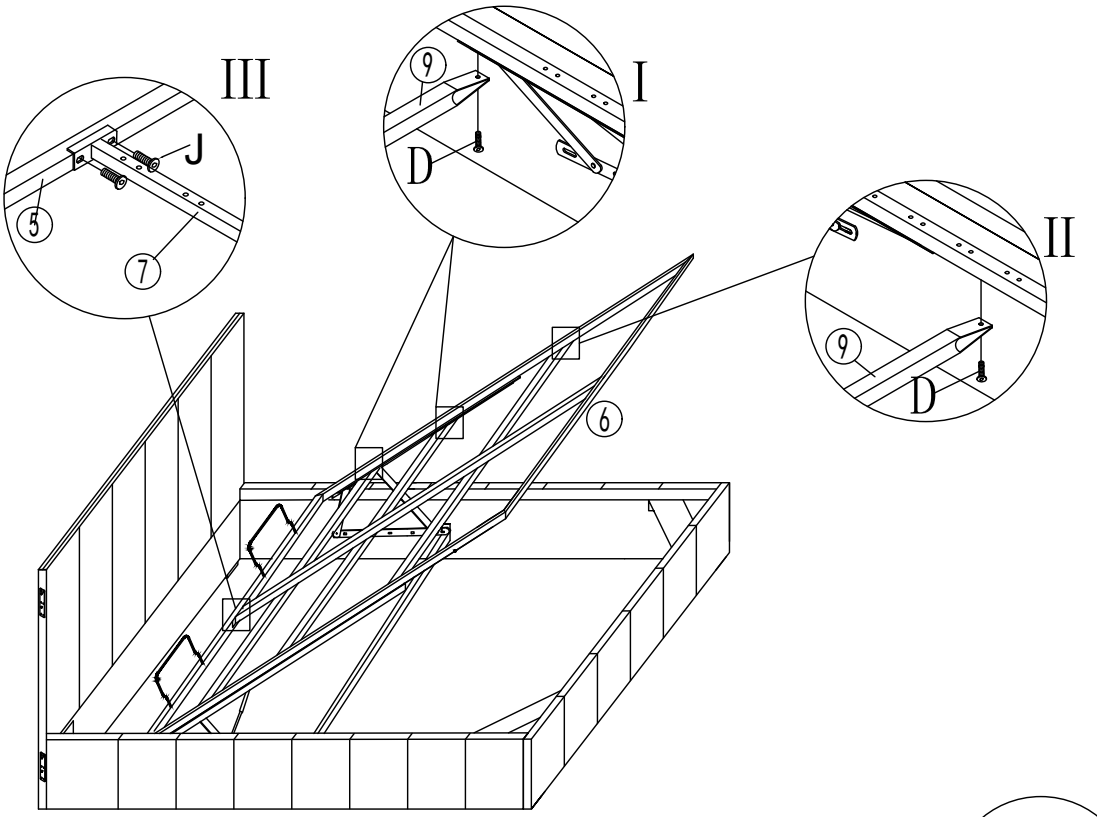

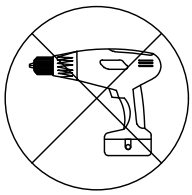

7

A	B
32x	16x

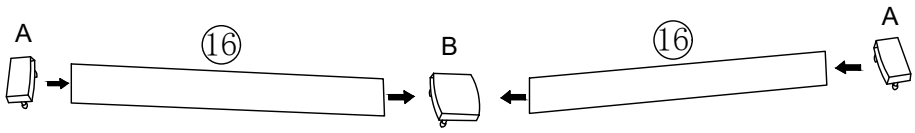

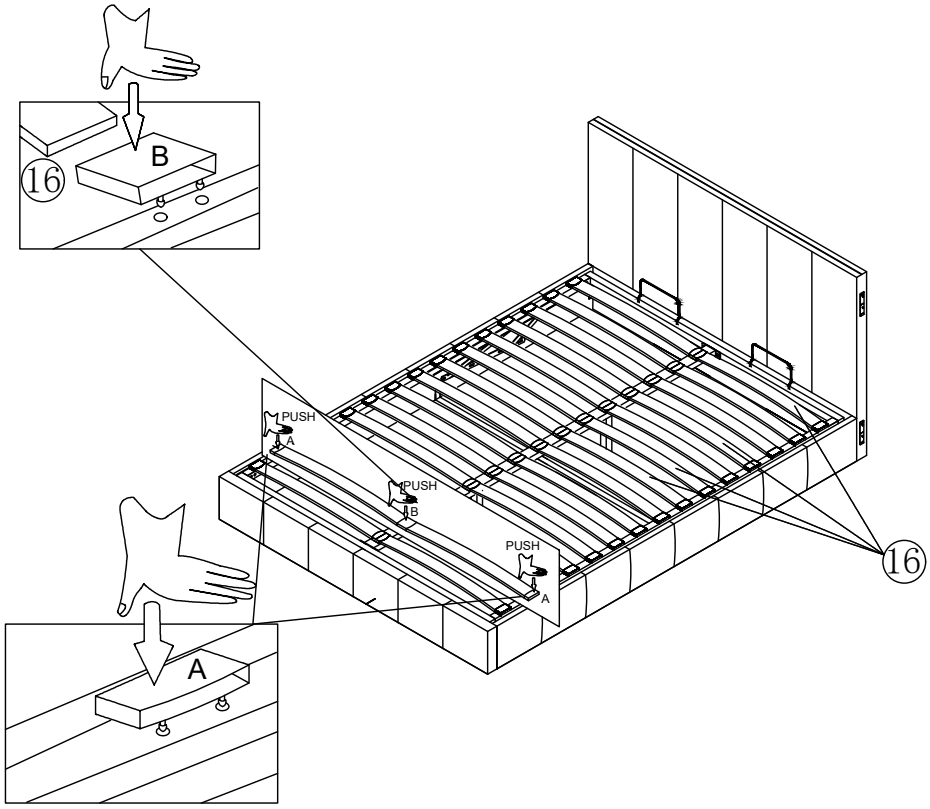

8

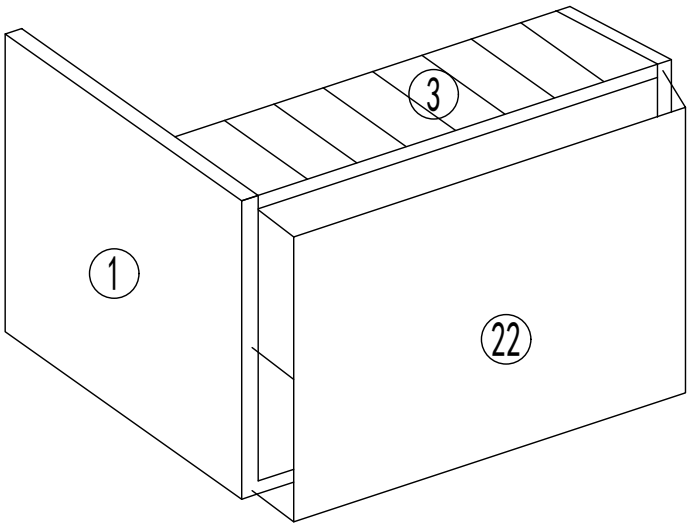

9

Nut
G
4x

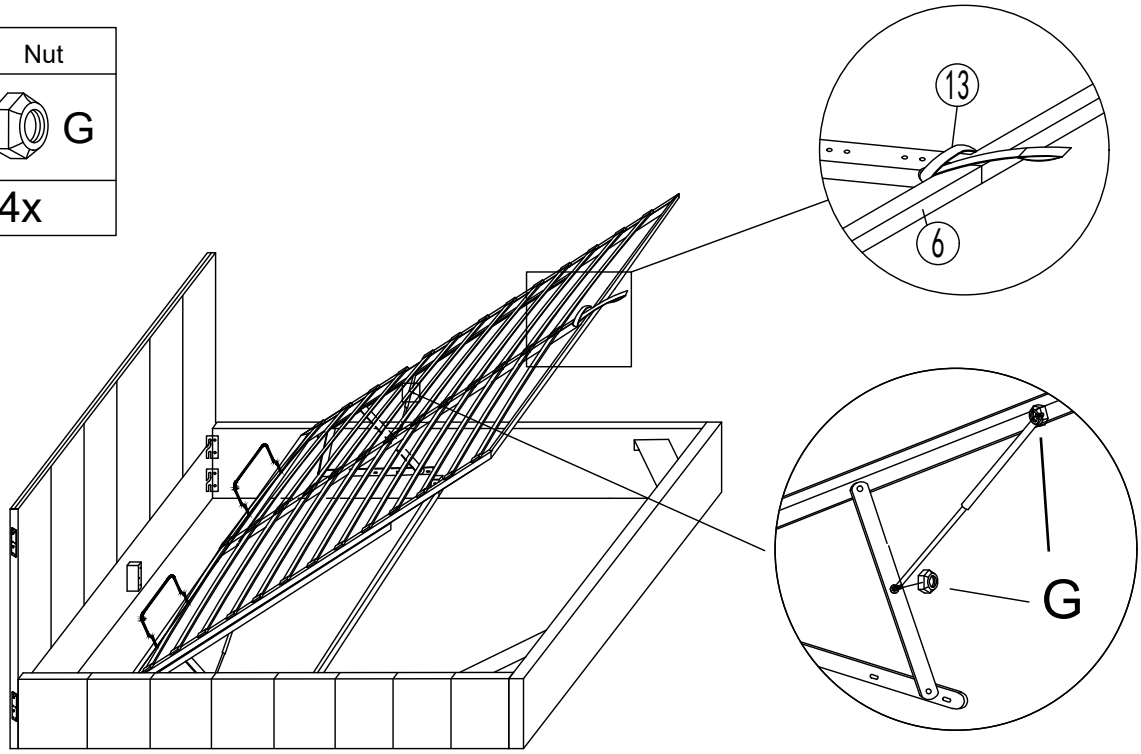

⚠ NOTE: Do Not Overtighten

Warning：Should one of the side of the gaslift struts failed / lost of pressure or suspected to be failed or lost of pressure please stop using the ottoman storage function and contact retailer you bought your bed from.

10

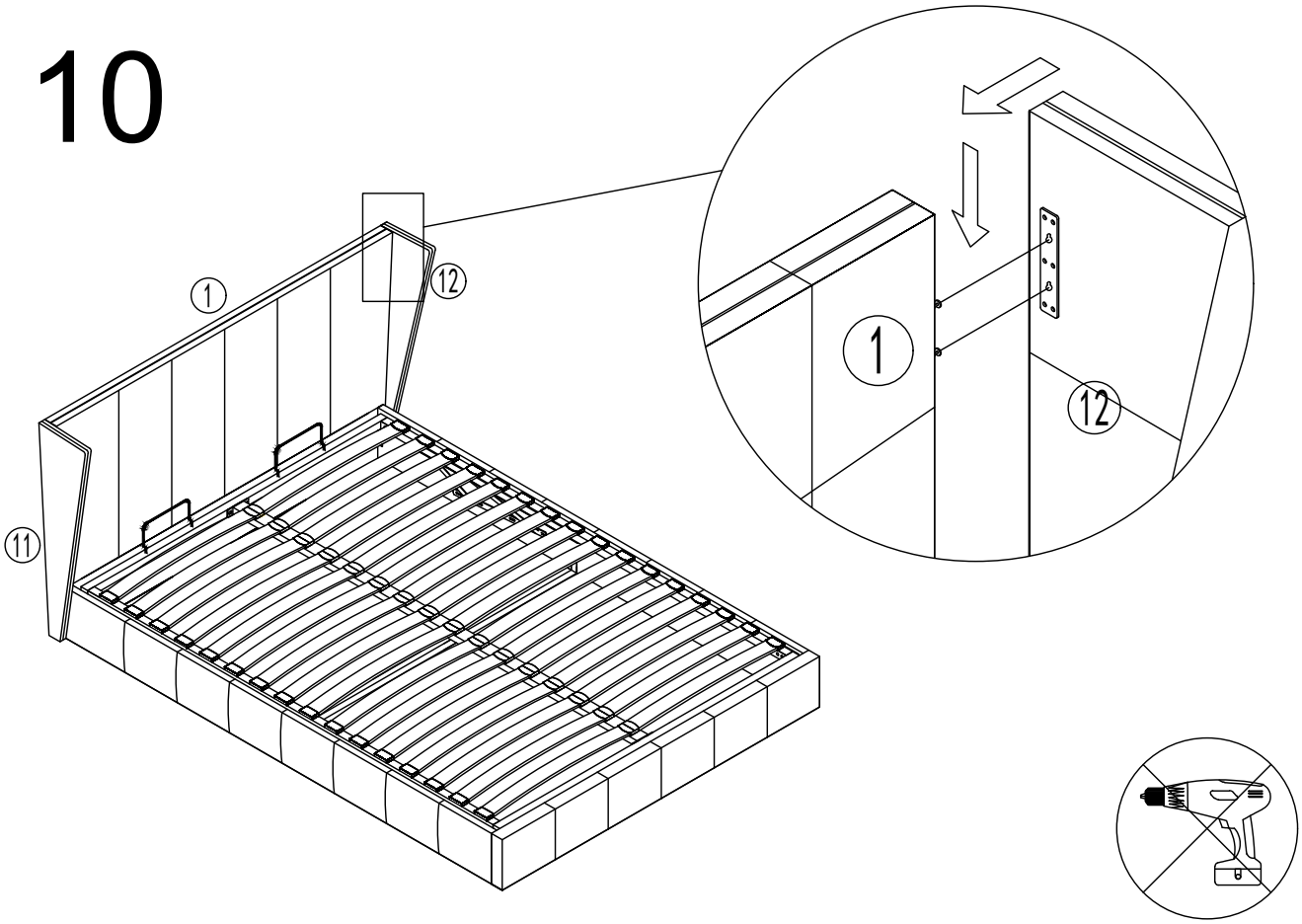

GENERAL CARE & MAINTENANCE

We advise that when cleaning the product that a damp cloth is used.

Avoid the use of all household cleaners and abrasive.

Never push or drag the furniture.

Never attempt to move the furniture when fully loaded.

We advise that periodically all fixing are re-tightened.

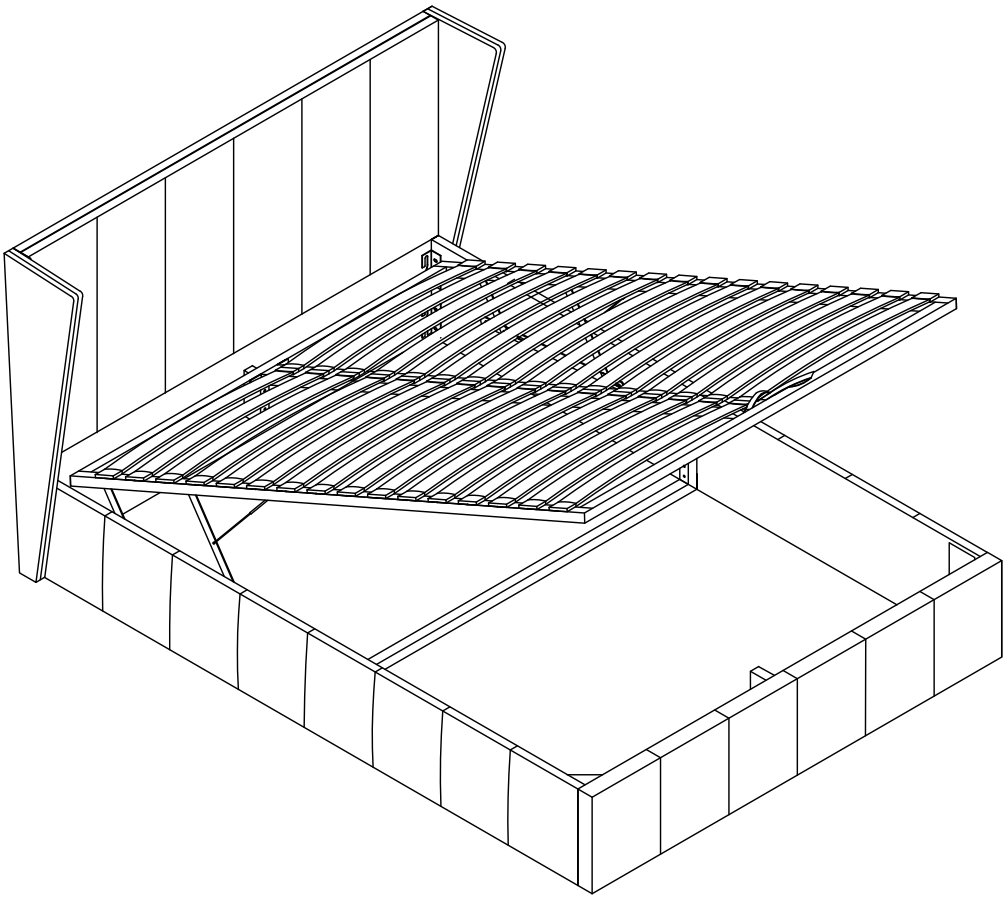

Max Mattress Height(cm)	Max Mattress Width(cm)	Max Mattress Length(cm)	Max Mattress Weight(kg)
20	150	200	45

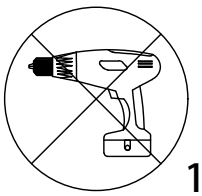

JULIAN BOWEN

Bentinck House, Park Lane Business Park, Kirkby-in-Ashfield, Notts NG17 9LE
Tel: (01623) 727374 Fax: (01623) 754555 Email: sales@julian-bowen.co.uk Web:julian-bowen.co.uk

EN:
In compliance with the EU General Product Safety Regulation (2023), Julian Bowen Limited has authorised the person named below to perform the tasks specified in the Regulation.

Name: Aris Christos Botsios Engineering Office
Adress: V. Botsiou 3 Street, Eleousa, Ioannina, 45500, Greece
Email: acsbotsios82@gmail.com
Telephone: 00302651063075 (landline)

DE:
In Übereinstimmung mit der EU-Verordnung über die allgemeine Produktsicherheit (2023) hat Julian Bowen Limited die unten genannte person ermächtigt, die in der Verordnung genannten Aufgaben wahrzunehmen.

Name: Aris Christos Botsios Ingenieurbüro
Adresse: V. Botsiou 3, Eleousa, Ioannina, 45500, Griechenland
E-Mail: acsbotsios82@gmail.com
Telefon: 00302651063075 (festnetz)

IT:
In conformità con il Regolamento Generale Sulla Sicurezza dei Prodotti dell'UE (2023), Julian Bowen Limited ha autorizzato la persona indicata di seguito a svolgere i compiti specificati nel Regolamento.

Nome: Aris Christos Botsios Ufficio tecnico
Indirizzo: V. Botsiou 3, Eleousa, Ioannina, 45500, Grecia
Email: acsbotsios82@gmail.com
Telefono: 00302651063075 (linea fissa)

FR:
Conformément au règlement de l'UE sur la Sécurité Générale des Produits (2023), Julian Bowen Limited a autorisé la personne nommée ci-dessous à effectuer les tâches spécifiées dans le règlement.

Nom: Aris Christos Botsios Bureau d'études
Adresse: V. Botsiou, Eleousa, Ioannina, 45500, Grèce
Courriel: acsbotsios82@gmail.com
Téléphone: 00302651063075 (ligne fixe)

ES:
En cumplimiento del Reglamento de la UE relativo a La Seguridad General de Los Productos (2023), Julian Bowen Limited ha autorizado a la persona nombrada a continuación a realizar las tareas especificadas en el Reglamento.

Nombre: Aris Christos Botsios Oficina de Ingeniería
Dirección: V. Botsiou 3, Eleousa, Ioannina, 45500, Grecia
Correo electrónico: acsbotsios82@gmail.com
Teléfono: 00302651063075 (teléfono fijo)

SE:
I enlighet med EU förordning om allmän produktsäkerhet (2023) har Julian Bowen Limited bemyndigat den person som anges nedan att utföra de uppgifter som anges i förordningen.

Namn: Aris Christos Botsios Ingenjörsbyrå
Adress: V. Botsiou 3 Street, Eleousa, Ioannina, 45500, Grekland
E-post: acsbotsios82@gmail.com
Telefon: 00302651063075 (fast telefon)

NL:
In overeenstemming met de EU-verordening inzake algemene productveiligheid (2023) heeft Julian Bowen Limited de hieronder vermelde persoon gemachtigd om de in de verordening gespecificeerde taken uit te voeren.

Naam: Aris Christos Botsios Ingenieursbureau
Adres: V. Botsiou 3 Street, Eleousa, Ioannina, 45500, Griekenland
E-mail: acsbotsios82@gmail.com
Telefoon: 00302651063075 (vaste lijn)